467

Handwritten Character Generation using Y-Autoencoder for Character Recognition Model Training

Kitagawa Tomoki[1], Chee Siang Leow[1,2] and Hiromitsu Nishizaki[1]

Integrated Graduate School of Medicine, Engineering, and Agricultural Sciences, University of Yamanashi, *JAPAN[1]*

Artibrains LLC, JAPAN[2]

1. Introduction

Highly performance AI-OCR requires large amounts of data

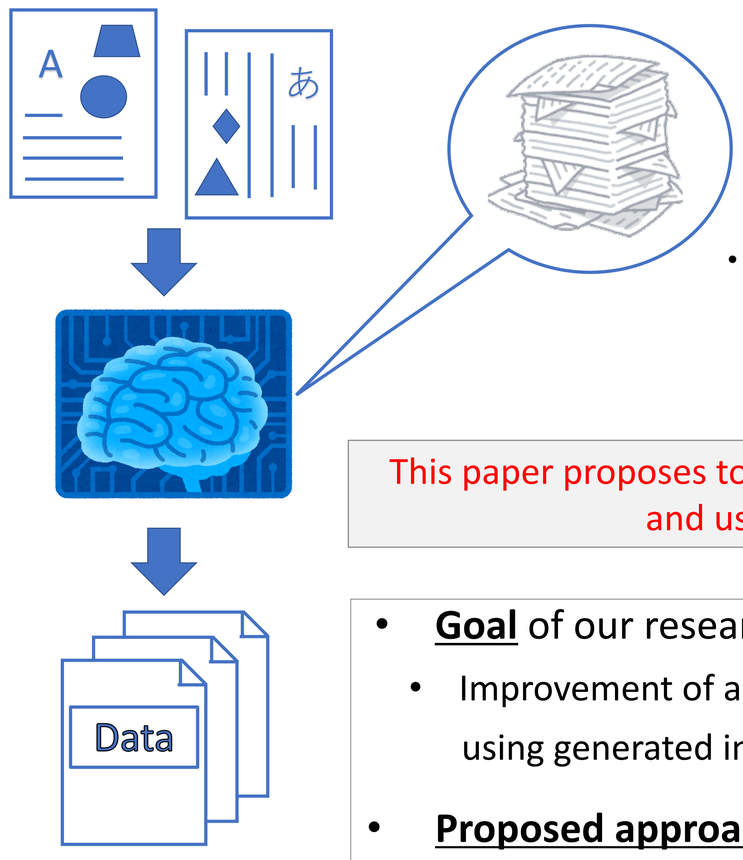

Handwritten data is difficult to collect

➠ Cost, Time, Manpower

➠ Many types of characters

English
- Alphabet (26 types)

VS

Japanese
- Hiragana (46 types)
- Katakana (46 types)
- Kanji (Over 6000 types)

This paper proposes to generate handwritten character images and use them as training data.

- **Goal** of our research
  - Improvement of accuracy of character recognizers using generated images
- **Proposed approach**
  - Use a generative model that combines Y-Autoencoder (Y-AE) with Adaptive instance normalization (AdaIN)

2. Related Works

CycleGAN (font to handwrite Chinese Characters)

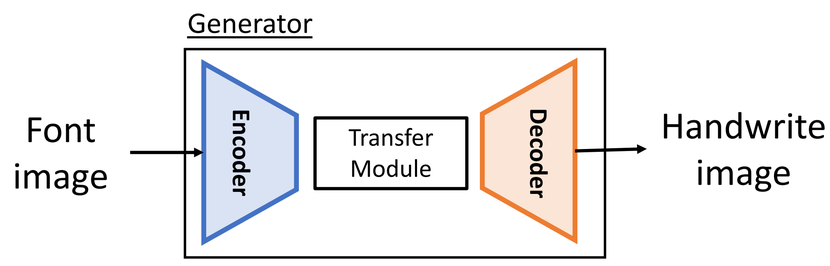

- Can only convert a single font image to only a single type of handwritten character image
- Few variations

cCGAN + cCVAE (generated handwritten images)

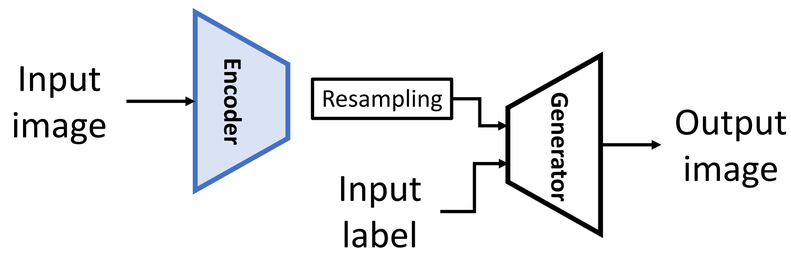

- The quality of the generated image was not stable

3. Proposed Model

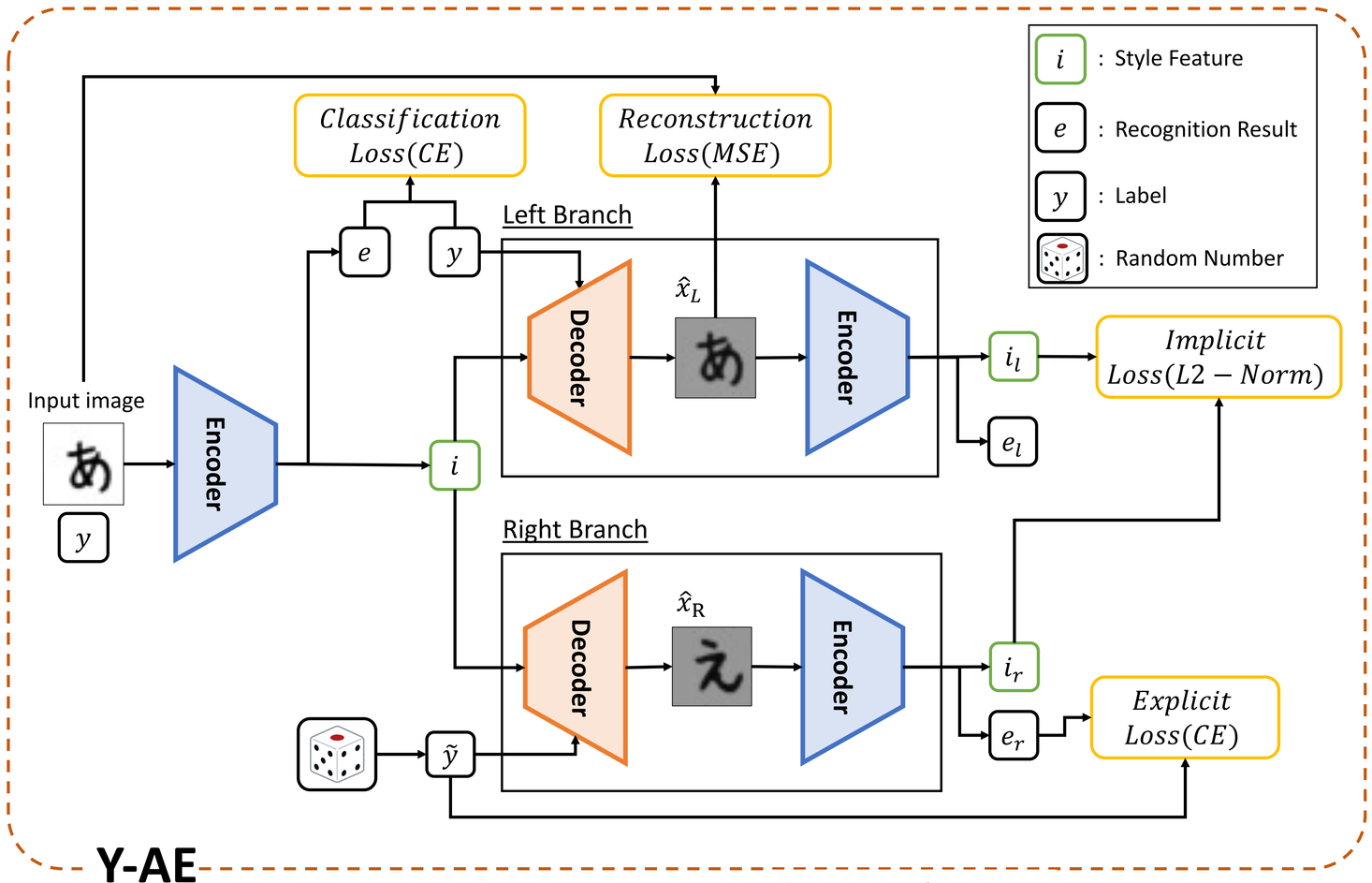

Y-AE with AdaIN

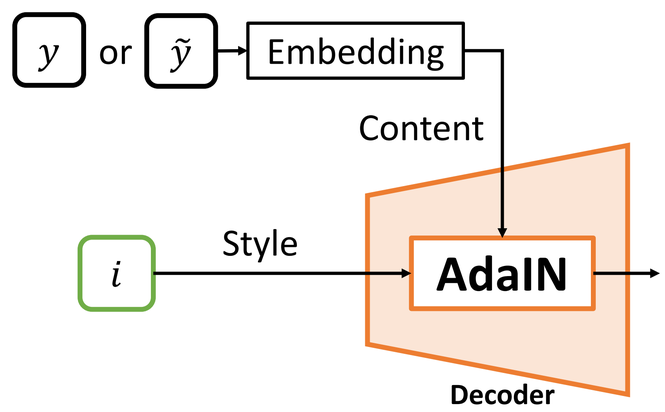

$$AdaIN\,(c,s) = \sigma(s)\left(\frac{c-\mu(c)}{\sigma(c)}\right) + \mu(s)$$

c: content
s: style

Generated images

46 different images can be generated from a single image.

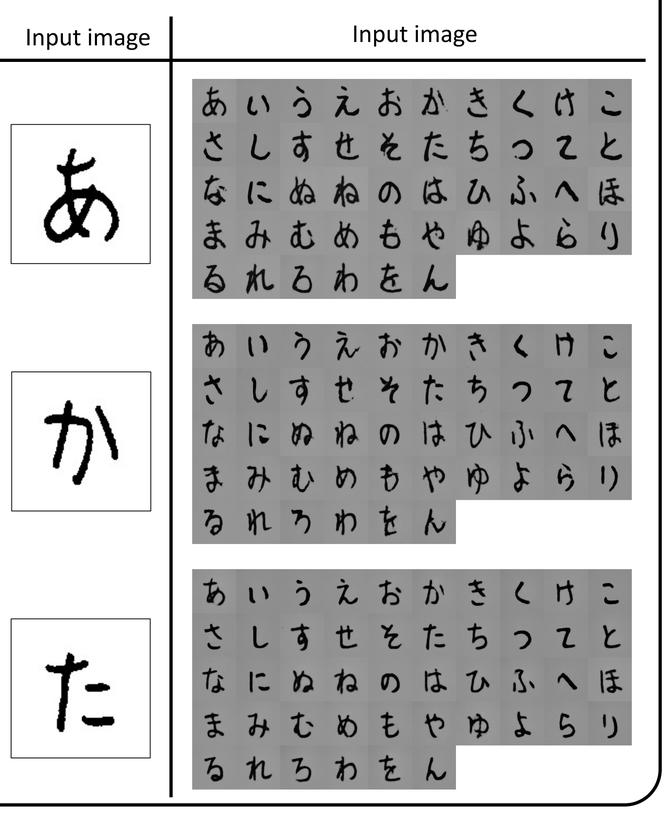

4. Experiment

Comparison of F1-score of handwriting recognizers

- 46 characters types

Hiragana (46 characters)

わ	ら	や	ま	は	な	た	さ	か	あ
	り		み	ひ	に	ち	し	き	い
を	る	ゆ	む	ふ	ぬ	つ	す	く	う
	れ		め	へ	ね	て	せ	け	え
ん	ろ	よ	も	ほ	の	と	そ	こ	お

Dataset: ETL

- Japanese handwriting character dataset
- Consists of 9 subsets

	Dataset	Num. of images
Training	ETL7	32,200
Validation	ETL8G	8,510
Testing	ETL9G	9,200

Hyper-parameters of the handwriting recognizer

- Model : VGG16
- Optimizer : Adam
- Learning rate : 1e-4
- Iteration : Adjusted for the same number of data used per training

Results (F1-score [%])

Training dataset	F1-score
ETL7 only	0.8664
Generated image only	0.9192
ETL7 + generated images	**0.9281**

5. Future Work

- Work on other characters, more complex character generation (Katakana, Kanji, etc …)
- More detail analysis of generated images
  - Variations of generated images
  - Comparison with data augmentation, effect of combination
  - Selection of generated images for training